ASIA PACIFIC INTERNATIONAL SYMPOSIUM
ON AEROSPACE TECHNOLOGY
CAIRNS, QUEENSLAND, AUSTRALIA
25-27 NOVEMBER 2015

# A two equation VLES turbulence model with near-wall delayed behaviour

D. W. Stephens[1], C. Sideroff[2], and A. Jemcov[3]

[1]Applied CCM Pty Ltd, Australia
[2]Applied CM Canada, Canada
[3]University of Notre Dame, USA

# Introduction

- RANS simulations are still the dominant approach to turbulence modelling for high Reynolds number flows.
- DES approaches are used to offset the cost of the LES by retaining RANS characteristics in boundary layers while using LES away from the walls.
  - DES approach requires LES-like resolution away from the walls.
- Coarse meshes → DES away becomes unresolved LES.
- Introduces a delayed two equation VLES model.
  - Model constants selected to give Smagorinsky subgrid-scale model for grids approaching the resolution required for LES.
  - Near wall RANS behaviour is obtained using blending functions.

# VLES Model

- Start with VLES model from Speziale (1998)

  Sub-grid scale stress: $\tau_{ij}^{sub} = F_r \tau_{ij}^{RAS}$ ; Resolution function: $F_r = \left[1 - e^{\frac{-\beta\Delta}{L_k}}\right]^n$

  Kolmogorov dissipation length scale – $L_k = \frac{\nu^{0.75}}{\varepsilon^{0.25}}$

- Use result from Han and Kranjnovic (2013)

  Redefine resolution function: $F_r^* = \frac{F_r\left(L_c, L_k\right)}{F_r\left(L_i, L_k\right)}$

  $$F_r\left(L_c, L_k\right) = \left[1 - e^{\frac{-\beta L_c}{L_k}}\right]^n \qquad F_r\left(L_i, L_k\right) = \left[1 - e^{\frac{-\beta L_i}{L_k}}\right]^n$$

  turbulent cut-off: $L_c = C_x\left(\Delta_x \Delta_x \Delta_x\right)^{\frac{1}{3}}$ integral length-scale: $L_i = \frac{k^{\frac{3}{2}}}{\varepsilon}$

  enforce realisability limits: $F_r^* = \min\left(1, F_r^*\right)$

# VLES Model cont'd

- Resolution function contains constants β, *n* and $C_x$
  - Values from Speziale (1998) β=0.002 and *n=2*
  - $C_x$ chosen to be consistent with Smagorinsky const.: $C_x = \frac{\sqrt{0.3}C_s}{C_\mu}$
- $F_r^*$ scales the stress tensor everywhere.
- Delayed behaviour close to wall is required to maintain the correct turbulence energy production.

  $F_1$ from k-ω SST model used to detect boundary layer

$$F_r\left(L_c, L_k\right) = \left[1-\left(1-F_1\right)e^{\frac{-\beta L_c}{L_k}}\right]^n \qquad F_r\left(L_i, L_k\right) = \left[1-\left(1-F_1\right)e^{\frac{-\beta L_i}{L_k}}\right]^n$$

# Square Cylinder

- Transient, turbulent, 3D flow over a square cylinder, $Re_D$ = 21,400; Grid: ~ 700,000 hex cells;
- Solver: SLIM; Software: Caelus

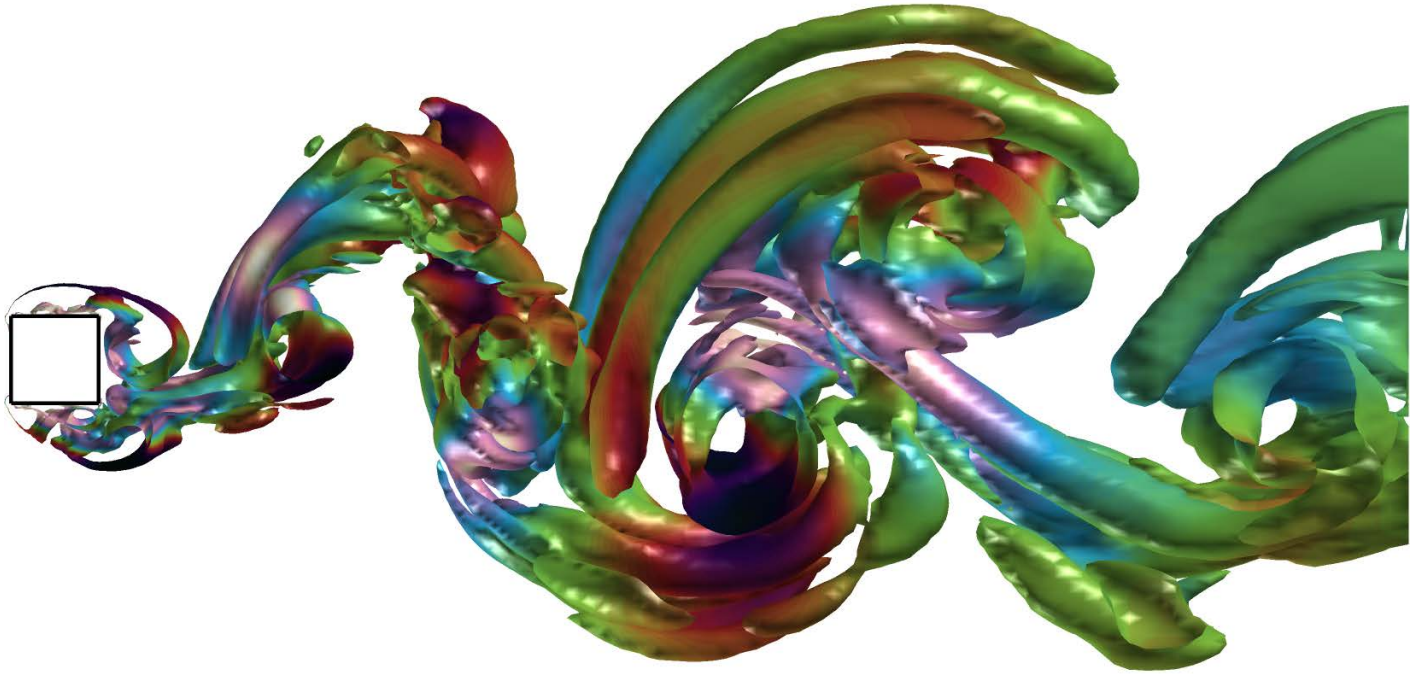

# Square Cylinder

- Comparison with experimental data of Lyn et al. (1995) and numerical results from Voke (1997).

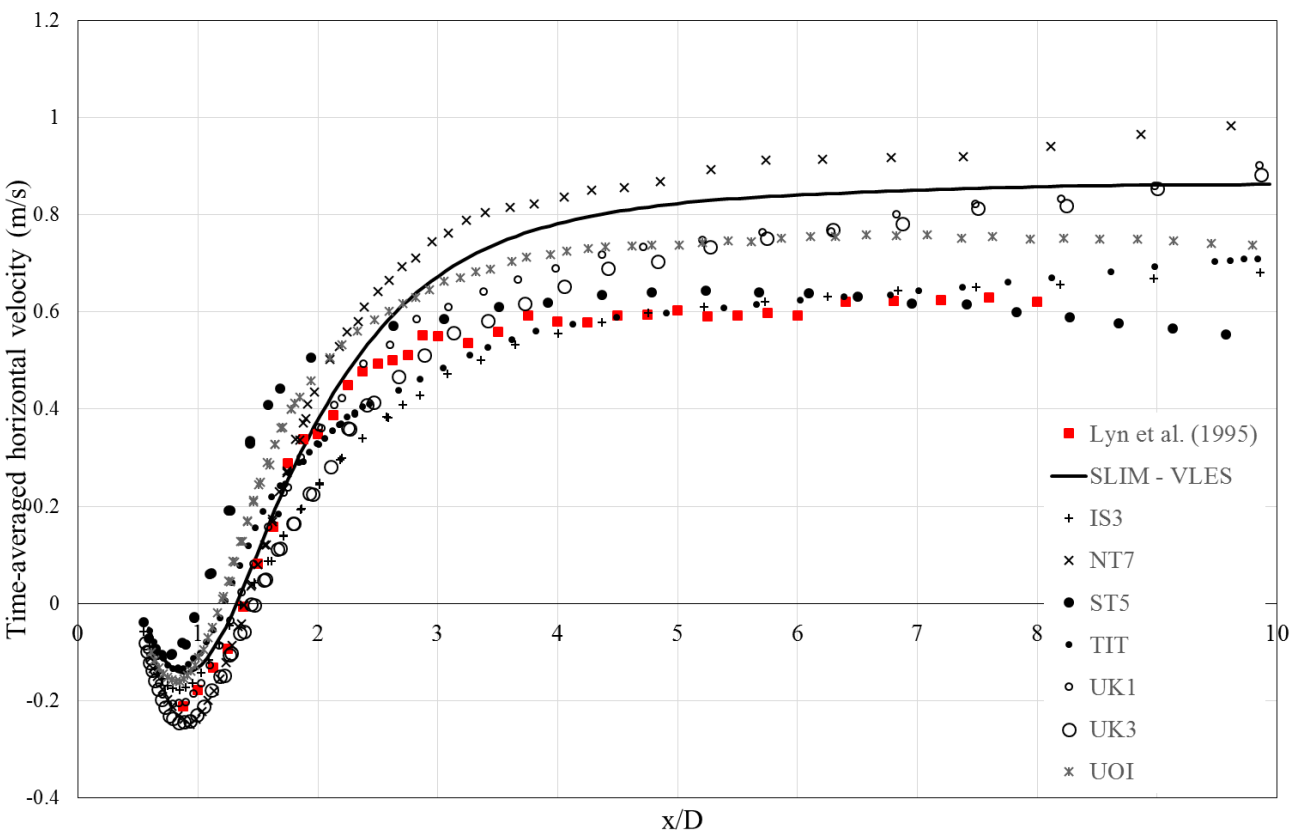

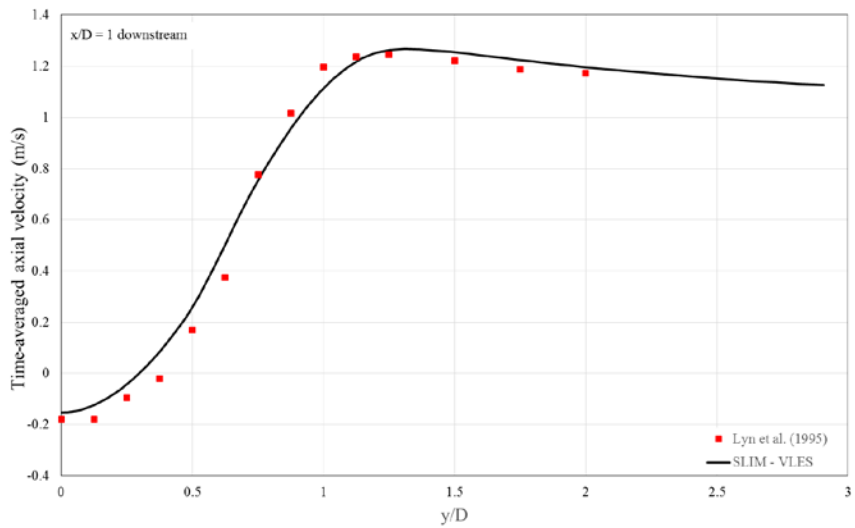


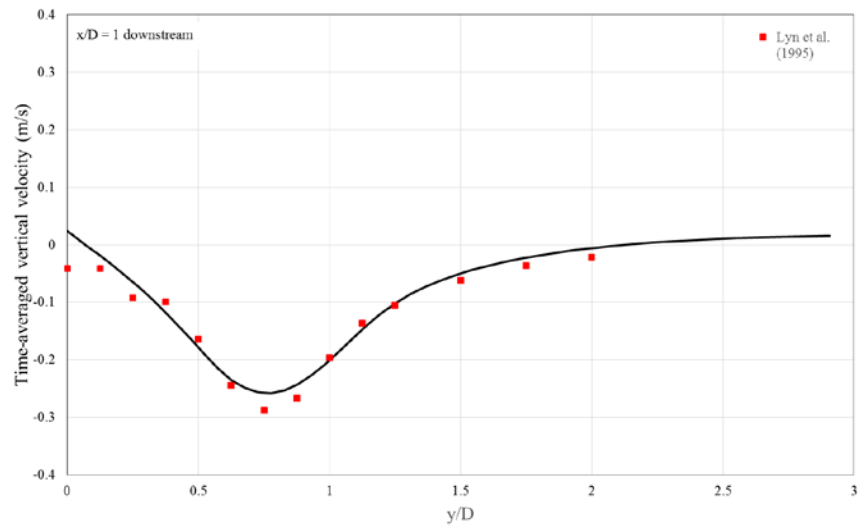


| Set | $l_r$ | St | $C_D$ |
|---|---|---|---|
| Lyn et al. (1995) | 1.38 | 0.132 | 2.1 |
| SLIM-VLES | 1.33 | 0.124 | 2.36 |
| Other CFD (max) | 1.44 | 0.15 | 2.79 |
| Other CFD (min) | 1.2 | 0.13 | 2.03 |

# Rudimentary Landing Gear (RLG)

- RLG is a benchmark test case from the Airframe Noise Comparisons (BANC) workshops.
- Exp. results reported in Venkatakrishnan et al. (2011)
- CFD results reported in Spalart and Mejia (2011).

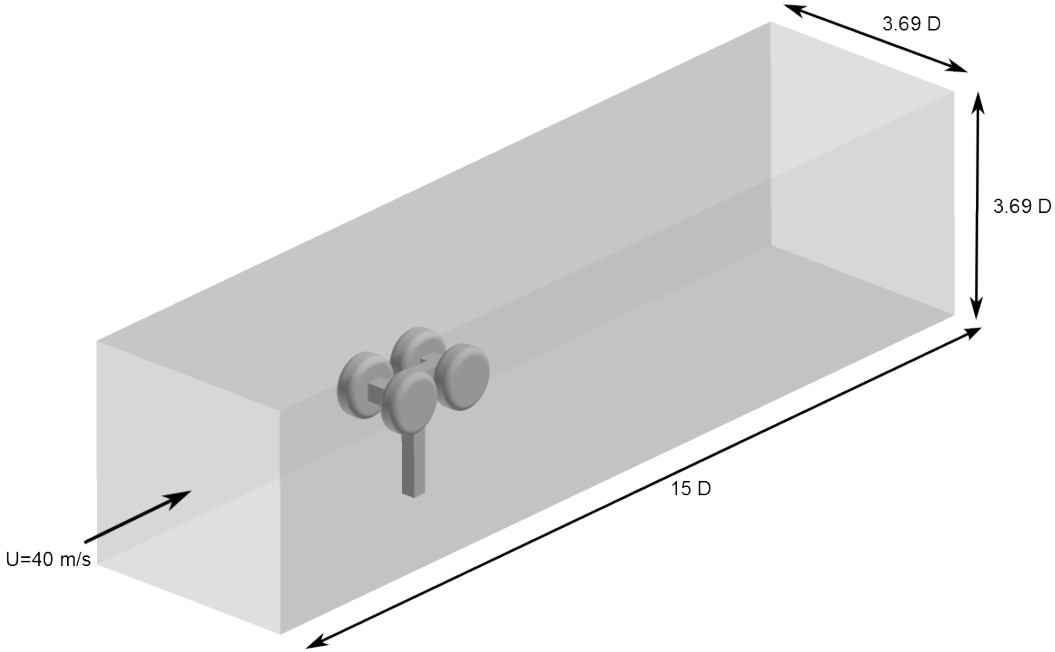

# Rudimentary Landing Gear cont'd

- $Re_D$ = 1 million; Grid: ~ 20 million hex cells;
- Solver: SLIM; Software: Caelus

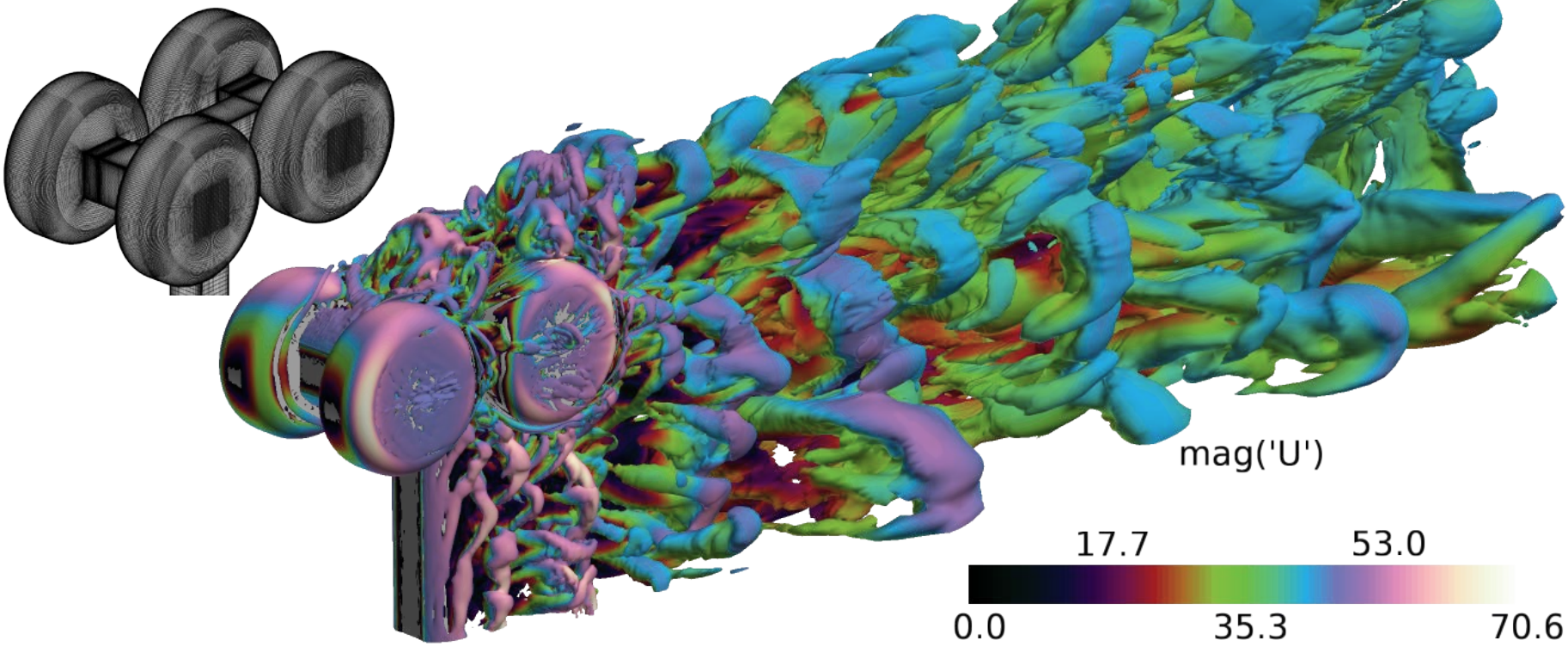

# Rudimentary Landing Gear cont'd

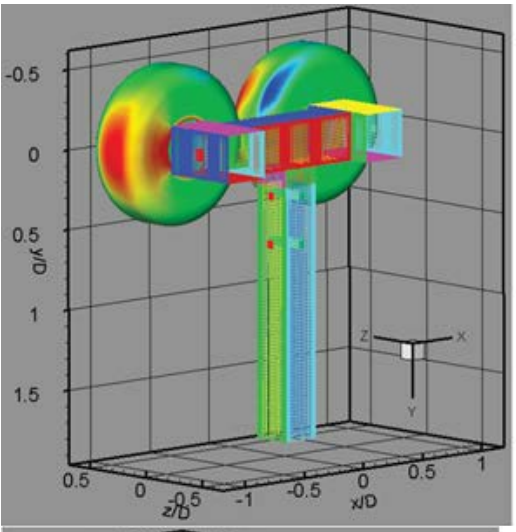


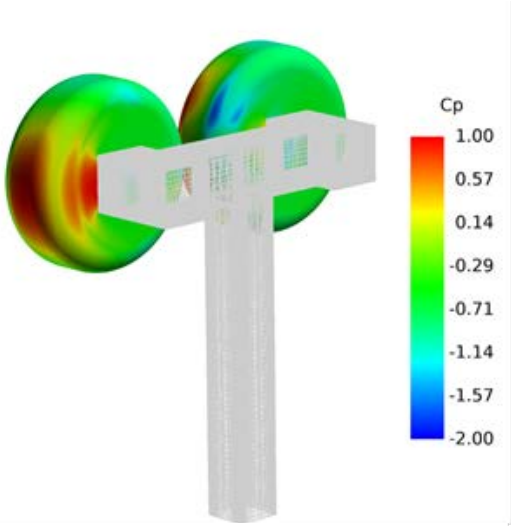


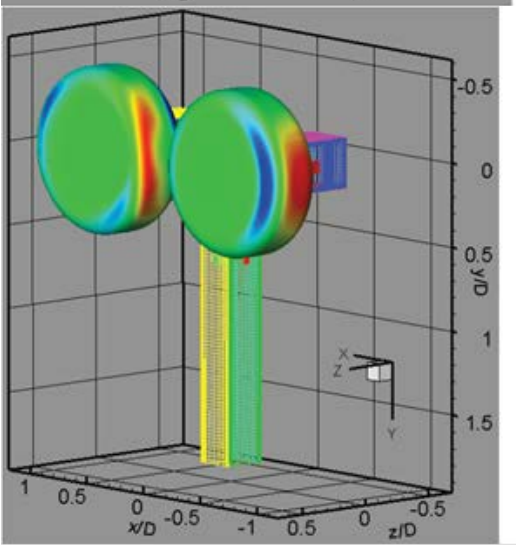


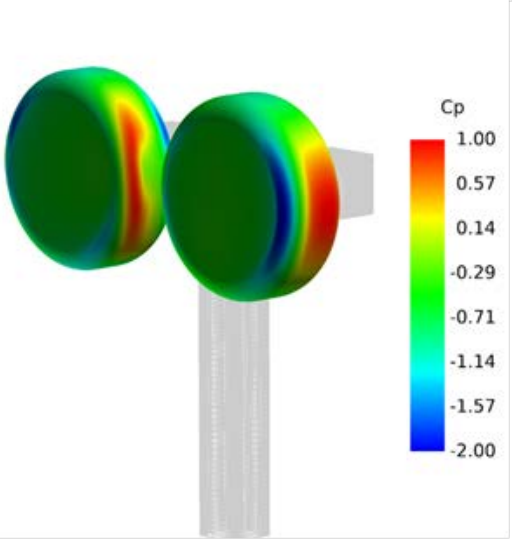


- Exp. pressure data mapped onto a surface grid of the landing gear.
- High-pressure zone on the inboard side of front wheel was captured well by VLES.
- Low-pressure region on top of the rear wheel was not captured as well.
- Pressure coefficient on outboard side of front wheel is in excellent agreement with exp. results.

# Rudimentary Landing Gear cont'd

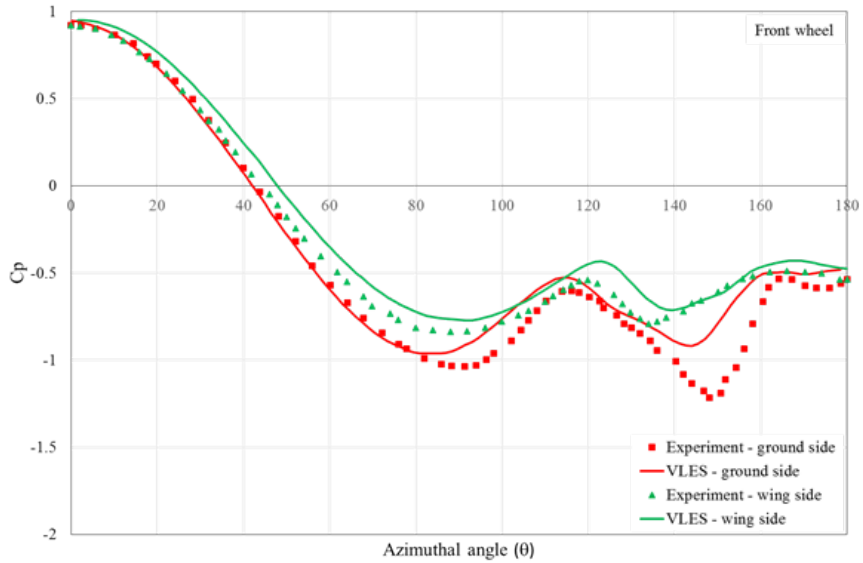


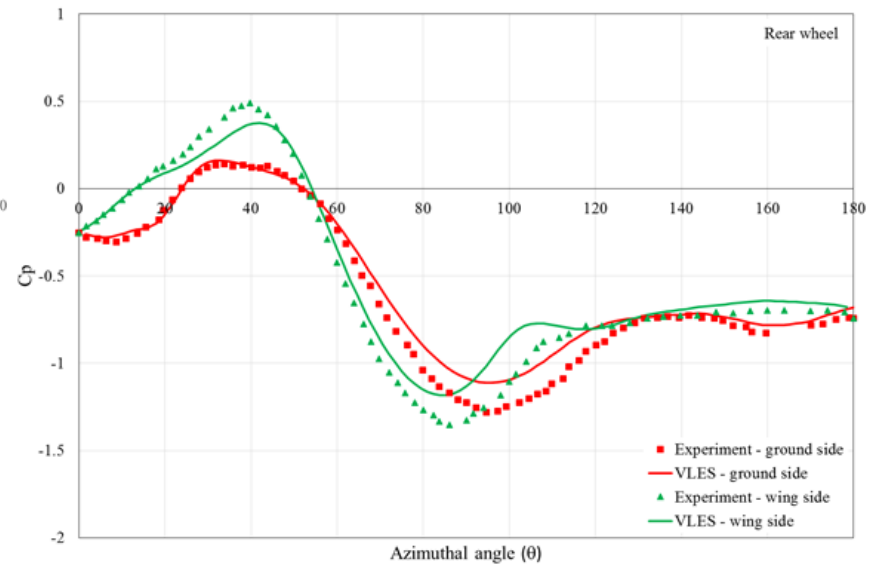


| Set | $C_D$ | $C_L$ |
|---|---|---|
| Venkatakrishnan et al. (2011) | 1.54 | -0.62 |
| SLIM-VLES | 1.50 | -0.18 |
| Other CFD (max) | 1.81 | -0.18 |
| Other CFD (min) | 1.70 | -0.28 |

# Computational Cost

- Simulations for square cylinder conducted using URANS, DDES, and LES. Each simulation used 60 Intel Xeon E5-2620v3 cores.

| Model | CPU time (s) per 1s flow time |
|---|---|
| URANS | 1.69 |
| DDES | 1.73 |
| VLES | 1.57 |
| LES | 1.32 |

- VLES model is very efficient. Additional testing required to establish general cost of the algorithm.

# Conclusions

- Introduced a delayed two equation VLES model.
  - Performance evaluated for Square Cylinder and RLG
    - Square Cylinder - efficiently captures the flow structures on relatively coarse meshes. Gave very good agreement with experimental data and comparable to previous LES and DES simulations.
    - RLG - favourable agreement with experimental surface pressure results for the majority of azimuthal positions.
      - Drag showed excellent agreement with experimental data.
      - Lift prediction, poor agreement with the experimental data, but comparable to other CFD predictions.
- Case studies showed the VLES model is an efficient approach for resolving large flow structures with predictive performance comparable to previous studies.